6N0 Hyaline • Swing Door with In-Line Panel (CUH)

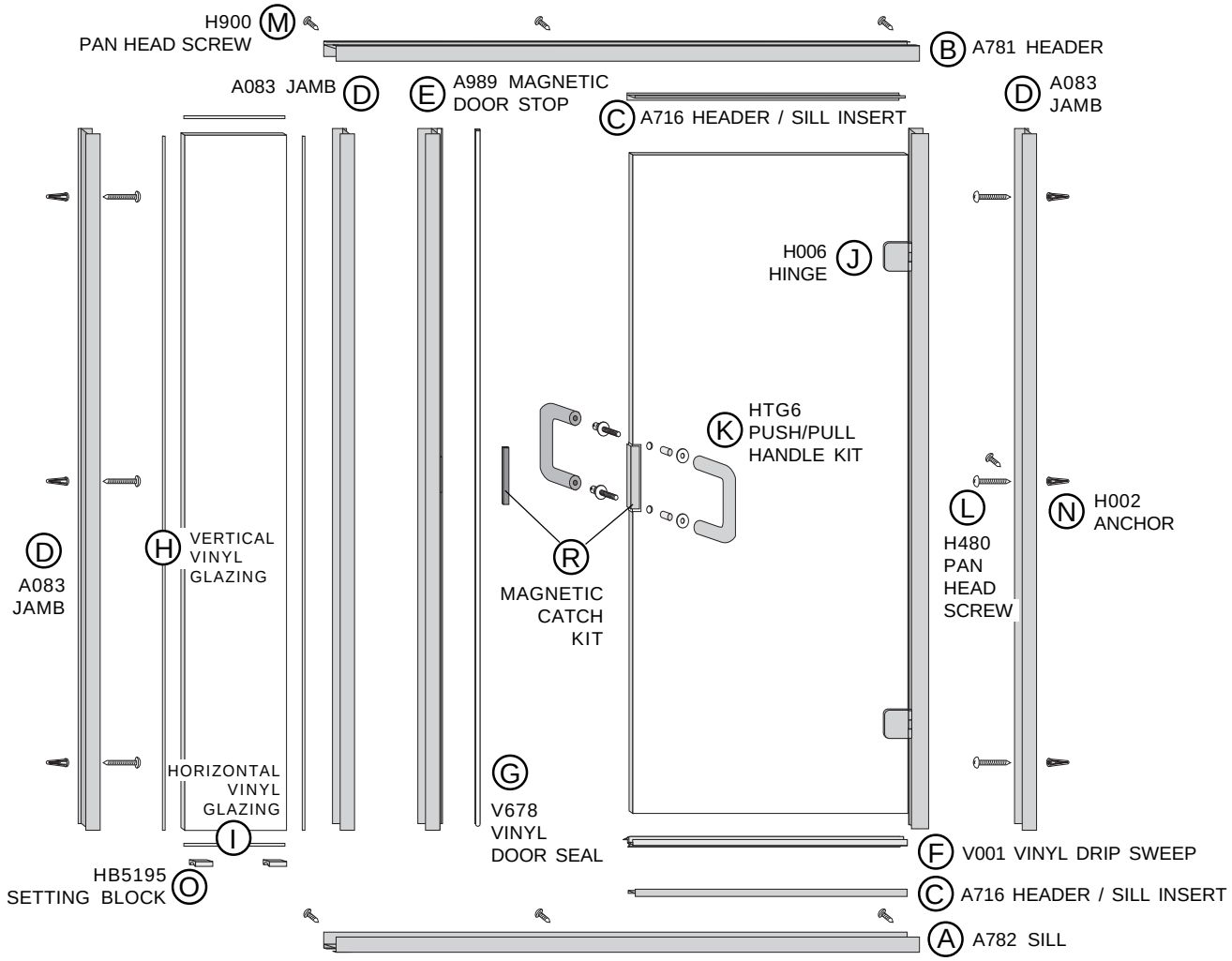

OUTSIDE OF SHOWER

FRAME PACKAGE PARTS

KEY	DESCRIPTION	PART	QTY
A	SILL (with weep holes)	A782	1
B	HEADER	A781	1
C	HEADER / SILL INSERT	A716	2
D	JAMB	A083	3
E	MAGNETIC DOOR STOP	A989	1
F	VINYL DRIP SWEEP	V001	1
G	VINYL DOOR SEAL	V678	1
H	VERTICAL GLAZING	VK250V	4
I	HORIZONTAL GLAZING	VK250H	4

HARDWARE PARTS

J	HINGE	H006	2
K	PUSH/PULL HANDLE KIT	HTG6	1
	PLASTIC WASHER		4
	EXTERIOR PULL HANDLE		1
	INTERIOR PULL HANDLE		1
	BUSHING		2
	HANDLE CONNECTOR SCREW		2
R	MAGNETIC CATCH KIT	HKMAGCH	1
	MAGNET HOLDER WITH MAGNET		1
	METAL SLIDE		1
	HANDLE VINYL		1
L	8A X 1 1/4" PAN HEAD SCREW	H480	8
M	8A X 3/8" PAN HEAD SCREW SELF DRILL	H900	14
N	ANCHOR	H002	8
O	SETTING BLOCK	HB5195	2
Q	4MM ALLEN WRENCH	H636	1

TOOLS NEEDED

1/8" Drill Bit
3/16" Drill Bit
(3/16" Masonry Bit for Ceramic Tile)
Pencil
Measuring Tape
Hacksaw
Phillips Screw Driver
Silicone Caulk
File
Drill
Level
Masking Tape
Rubber Mallet

Before starting installation of your new enclosure, carefully read all instructions and lay out parts to become familiar with their identity.

Frameless patch-hinge doors, by nature of their design, are not completely watertight.

CAUTION

Do not attempt to cut mirrors or glass used in this enclosure. Tempered glass and mirror will shatter if cut.

Care should be taken when standing raw glass on its edge. Glass may shatter if corners are bumped or edge is rested on a rough floor surface. Cardboard, wood blocks (provided with hardware), or a similar surface is a safe resting surface for glass.

CLEANING

Cleaning and care of your enclosure is important to its lasting beauty. A nonabrasive liquid cleaner is recommended.

Never use scouring powder or pads.

SEALING

Seal unit by caulking along outside of enclosure where metal and bath meet, especially where sill meets threshold. If desired, caulk inside of enclosure where jambs meet walls.

Kwikstal doors are designed to be reversible and may be installed to hinge-left or hinge-right. They may hinge off wall jamb or panel jamb. The following instructions show a hinge-left door, hinging off wall jamb. Other arrangements are installed in a similar manner.

1 Sill (A)

Header and sill are identical except that the sill has weep holes on inside surface. Identify sill with weep holes.

Determine placement of **sill** (A) on shower threshold. Normally door is installed with sill centered on the flat surface of threshold.

Measure opening at threshold and cut sill to that measurement. If necessary, file sharp edges to fit rounded corners of your unit.

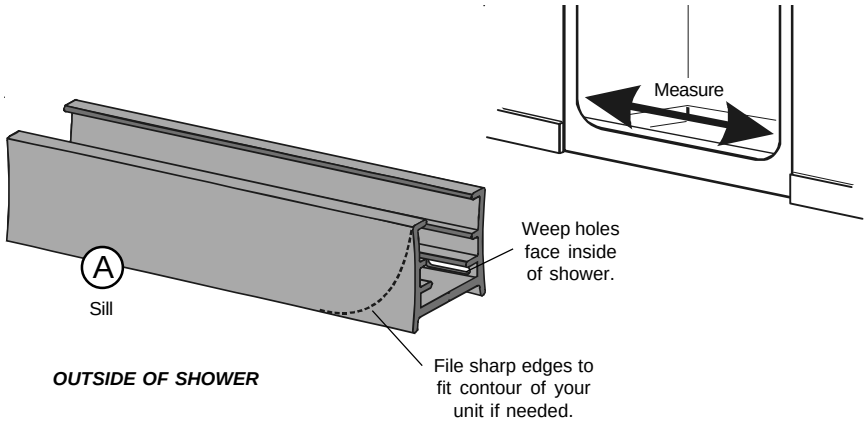

2 Sill (A)

With sill in upside down position, apply a 1/4" bead of caulk along bottom of sill.

Position sill on threshold with weep holes facing inside of shower. Tape to threshold with masking tape to hold in place while positioning jambs.

Clean caulk that squeezes out from under sill with a wooden wedge, plastic scraper, or popsicle stick.

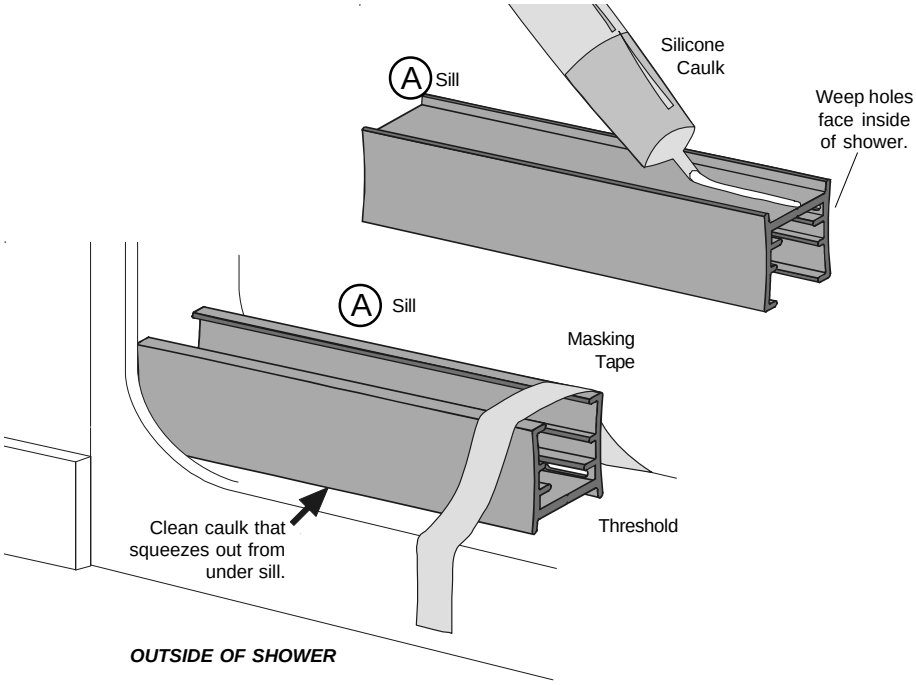

3 Jambs (D)

When anchors (N) are used holes should be drilled using 3/16" drill bit.

Position **jamb** (D) on sill with short legs against wall and bottom of jamb inside sill. If necessary, file sharp edges on bottom of jamb to fit rounded corners of your unit.

Align jamb vertically using a level. Drill mounting holes through jamb into wall using 1/8" drill bit. Mounting holes are normally located 3" from top and bottom of jamb and at center.

Secure jamb to wall using **8A x 1 1/4" pan head screws (L)**.

Repeat for opposite side.

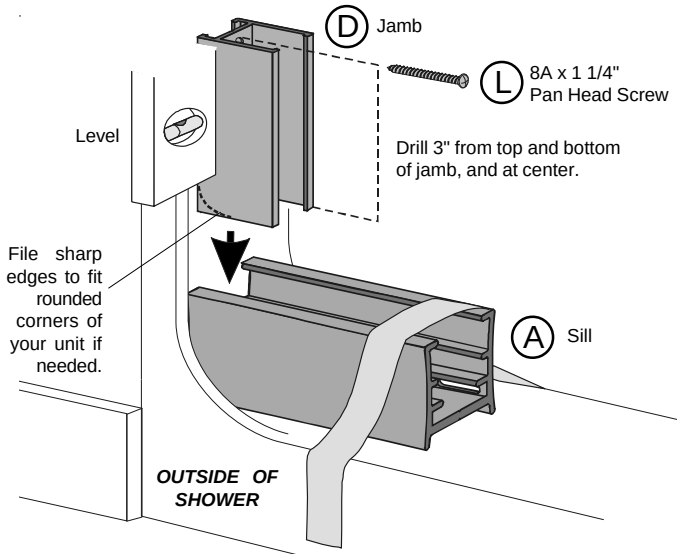

4 Magnetic Catch Kit (K)

Decide the placement of side panel and the opening side of your door. Door is normally installed to open on the side of unit nearest to showerhead.

Lay door panel, with outside surface up, on a work table covered with cardboard or carpet. Position so that opening edge of door panel extends over table edge past handle holes. Make certain attached hinge channel swings up toward outside surface of glass.

Mark center of glass on opening edge of door panel.

Wrap **handle vinyl**, from **magnetic catch kit** (K), over edge of glass. Thinner glass may require the use of two pieces of vinyl to insure a tight grip between handle and glass.

Hold **metal slide** for installation later. With a rubber mallet, tap **magnet holder**, with **magnet** attached, onto glass. Magnet should face inside of shower.

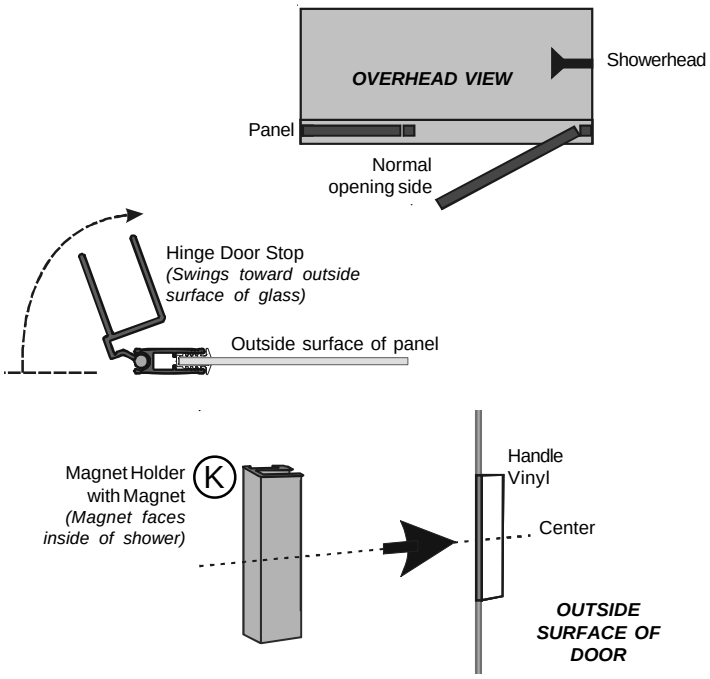

5 Push / Pull Handle Kit (J)

Push / Pull handle kit (J) comes with parts assembled in the order they will be once installed on glass. Disassemble parts.

Place **bushings** in holes in glass. Trim as needed so that bushings are flush with surface of glass. Place one **plastic washer** on each **connector screw** and insert screws (from inside surface of glass) through bushings in glass.

Place second plastic washer on exposed end of connector screws on outside surface of glass. Holding **exterior handle** in place on outside surface of glass, tighten connector screw to secure handle.

On inside surface of glass, slip **interior handle** over connector screws and tighten with **3/32" allen wrench** provided.

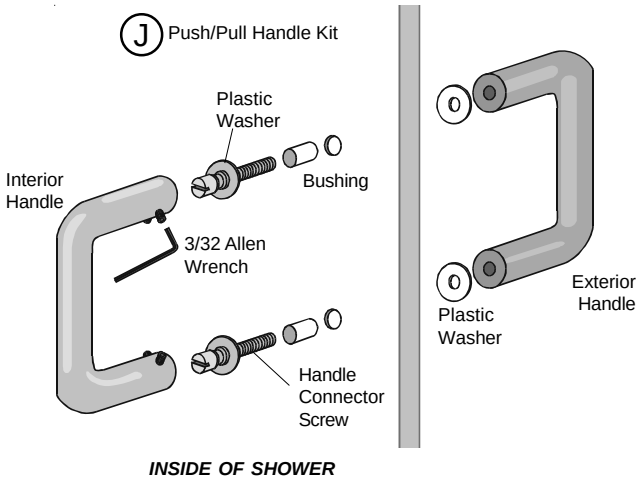

6 Setting Blocks (O) / Side Panel

The following instructions call for glass to seat in verticals 3/8". This distance may be adjusted from 1/4" - 1/2" to accommodate out-of-plumb walls and allow for a better fit of parts.

Setting blocks (O) are used in sill to provide a resting surface for panel glass. On panel side of unit, place one setting block in sill at edge of wall jamb. A second setting block should be placed in sill to support other corner of panel glass once glass in placed in unit. Measure panel glass and position remaining setting blocks accordingly.

Place panel glass in wall jamb with bottom of glass resting on setting blocks in sill and side of glass seated in wall jamb 3/8".

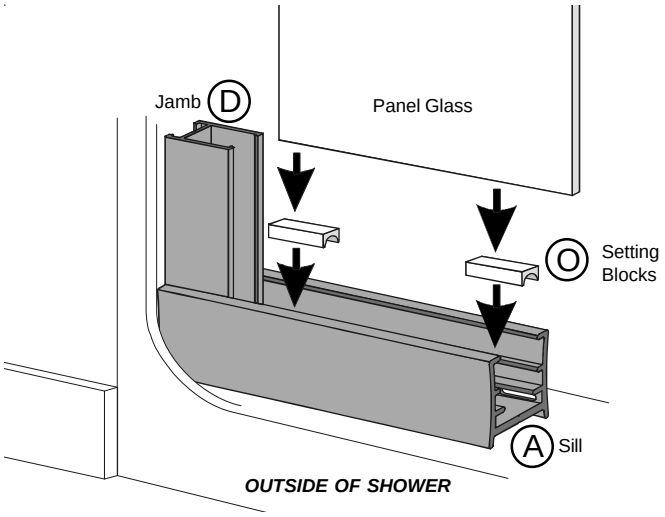

7 Jamb (D) / Magnetic Door Stop (E)

Place remaining **jamb** (panel jamb) over panel glass with long legs of jamb fitting over edge of glass 3/8", and bottom of jamb seated in sill.

Vinyl door seal (G), in **magnetic door stop** (E), must be removed from channel, trimmed into two pieces and replaced with **metal slide (R)** in between vinyl pieces.

Mark center of magnetic door stop. Trim vinyl door seal to fill open channel of door stop from sill to 2" below center mark. Reinsert cut vinyl in channel. Follow with metal slide and remaining piece of vinyl. Trim vinyl flush with door stop.

Slide magnetic door stop over jamb, with bottom of door stop seated in sill and vinyl door seal facing outside of shower.

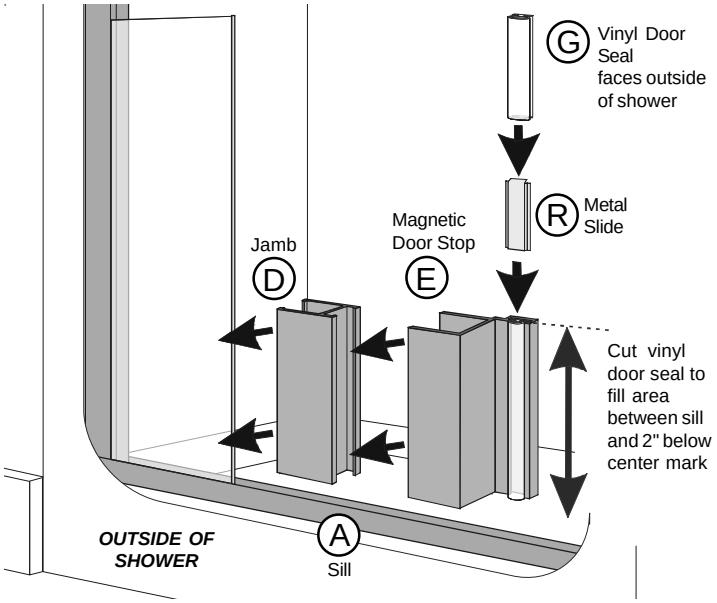

8 Hinge Door Stop

On opposite side of unit, place **hinge door stop** (with door attached) over wall jamb with bottom of door stop seated in sill. For safety purposes, door should be installed to open out from shower.

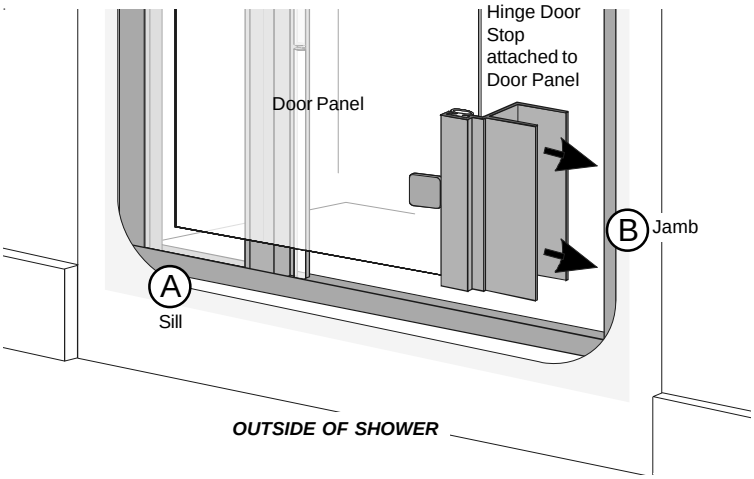

9 Header (B)

Measure from wall to wall (over the top of both jambs) and cut **header (B)** to that measurement.

Lower header into place over jambs.

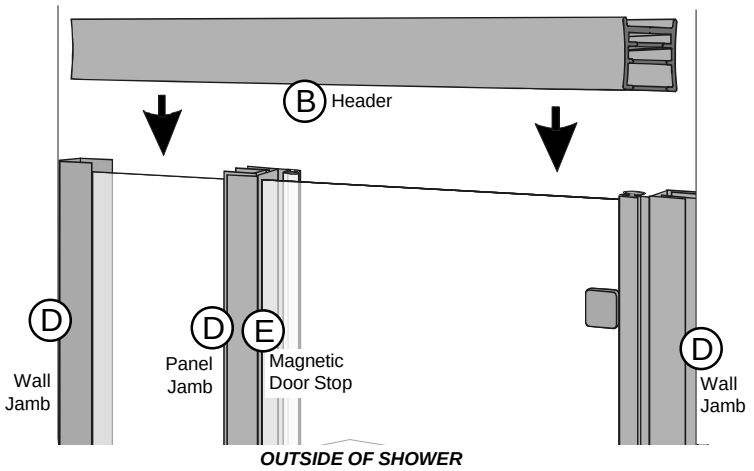

10 Sill / Header Inserts (C)

At bottom of door, snap **sill / header insert (C)** into sill with tall edge of insert toward outside of shower.

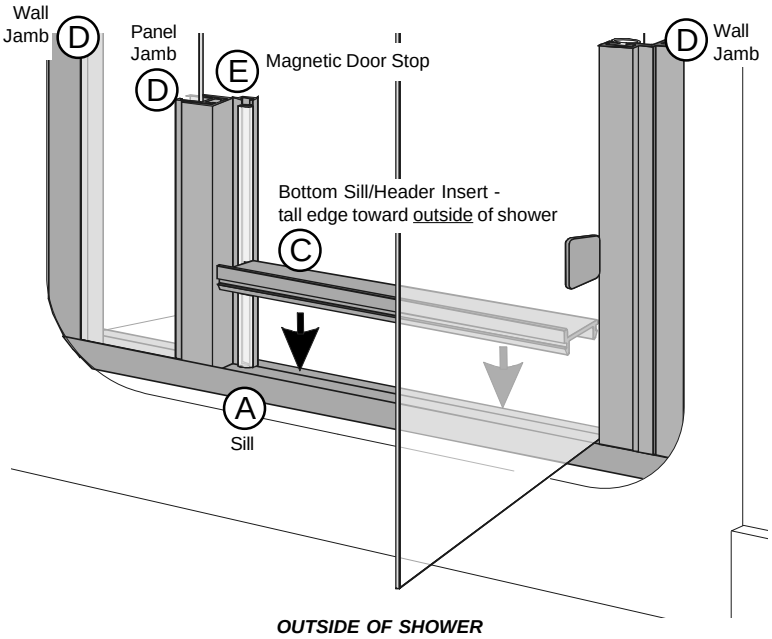

At top of door, snap **sill / header insert (C)** into header with tall edge of insert toward inside of shower.

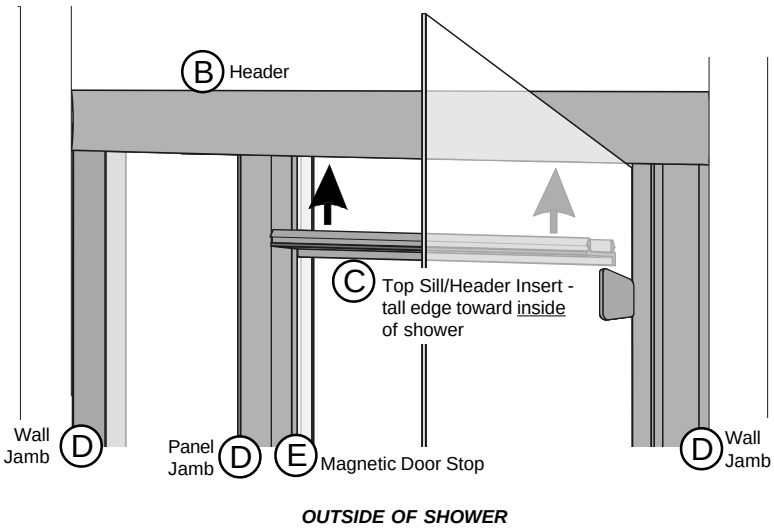

11 Aligning / Securing Verticals

When drilling or screwing into metal, make certain that glass is clear from area. Do not hit glass with drill bit.

Check alignment of door, panel glass, panel jamb, and magnetic door stop. Adjust as needed so that door closes evenly, there is an even reveal of space at top and bottom of door, and magnetic slide aligns with handle magnet.

Once desired alignment of parts has been achieved, secure parts together from inside of shower using **8A x 3/8" pan head self-drilling screws (M)**.

- a Attach wall jamb to hinge door stop in three locations - at top of unit, securing header, jamb and door stop together; at midpoint; and at bottom of unit, securing sill, jamb and door stop together.
- b Attach magnetic door stop to panel jamb in two locations - at top, securing header, magnetic door stop and panel jamb together, and at bottom, securing sill, magnetic door stop and panel jamb together.
- c Attach opposite wall jamb to header at top and sill at bottom.

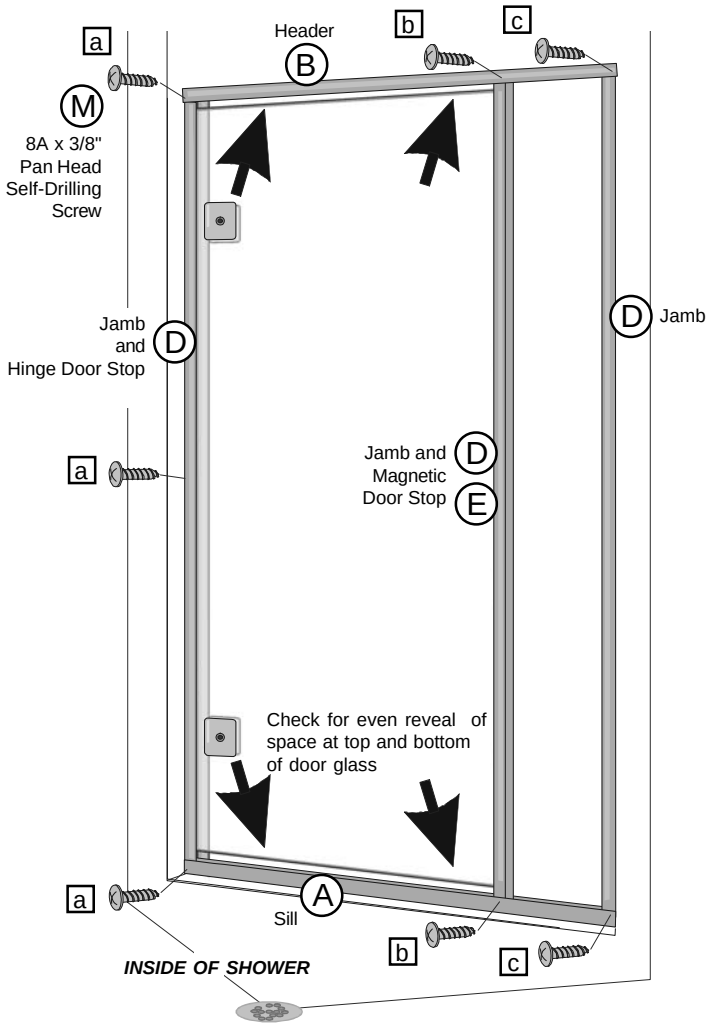

12 Vertical Glazing (H)

Vinyl glazing is used to cushion and secure glass in metal. There are two types of vinyl glazing included in your unit - **horizontal (I)** and **vertical (H)**. The vertical glazing is thinner and will be installed first.

Water may be used to lubricate glazing and make installation easier. Glazing is designed to fit tightly. A wooden block may be used to press vinyl into place.

Measure length of panel glass form header to sill and add 1/4". Cut 2 pieces of **vertical glazing (H)** to this measurement, one for inside and one for outside of panel.

Press ends of glazing into place first, fitting glazing into gap between metal and glass. Work toward center, pressing glazing into place.

Repeat for inside of shower and for opposite side of panel on inside and outside of shower.

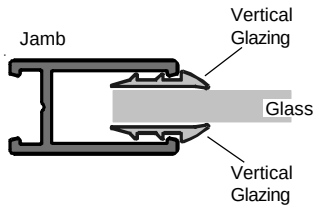

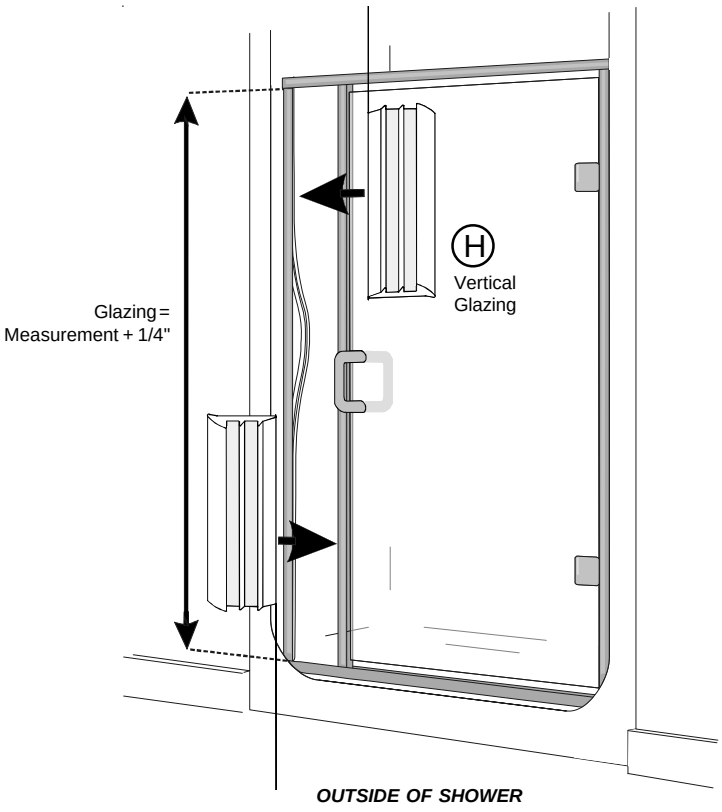

13 Horizontal Glazing (I)

Apply **horizontal glazing (I)** on inside and outside of panel between glass and header at top of unit, and between glass and sill at bottom of unit.

For a smoother fit in corners where horizontal and vertical glazings meet, the ends of horizontal glazing may be trimmed at a 45^0 angle. Only trim the exterior ridge of glazing, not the section of glazing that fits inside metal once installed.

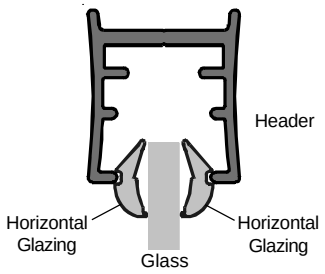

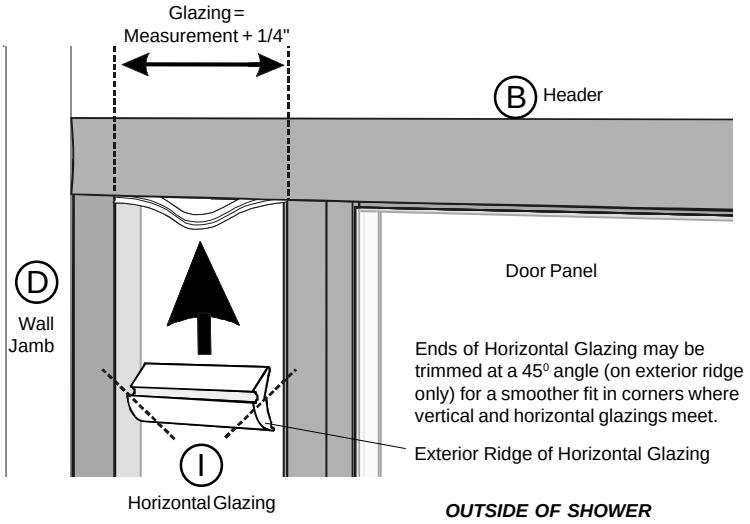

14 Vinyl Drip Sweep (F)

Measure width of door glass at bottom.

Trim **vinyl drip sweep (F)** to door glass width minus 1/8". Trim only from door hinging end of drip sweep. Contour cut end of drip sweep fin to remove sharp point.

Press drip sweep onto bottom edge of door glass with fin facing inside of shower and edge of drip sweep flush with edge of glass on hinging side of door.

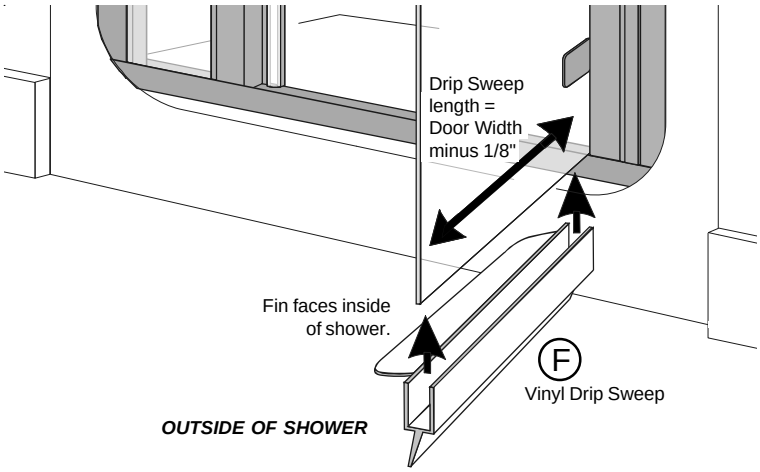

15 Caulking

Seal unit by caulking along outside of enclosure where metal and bath meet, especially where sill meets threshold. If desired, caulk inside of enclosure where jambs meet walls.

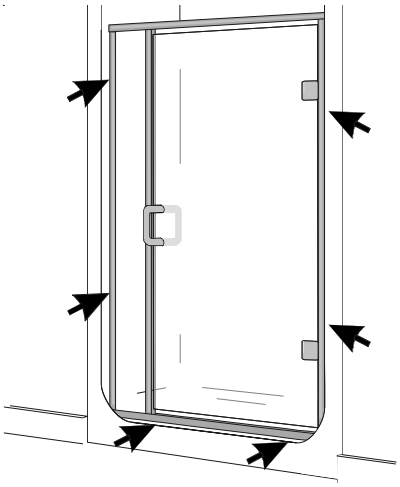

6N0